Reducing Space-Based Science Instrument Cost and Mass with a Modular Off-the-Shelf System

M. A Ravine, J. A. Schaffner and M. A Caplinger
Malin Space Science Systems

Confidential and Proprietary Material of MSSS.

Introduction

- MSSS has developed a modular, high-heritage imaging system for engineering applications (ECAM). It consists of 4 cameras and a central processing unit to compress and buffer their data. The cameras use small CMOS sensors to provide megapixel stills and HD format video suitable for engineering applications (monitoring deployments, space situational awareness) and public outreach.

- The ECAM architecture also provides a platform for science. MSSS is currently developing a range of higher performance ECAM cameras capable of providing science-quality data for a range of wavelengths.

- ECAM with these high performance cameras provides many options for science imaging from the UV to thermal IR, within the mass and cost constraints of competed and/or small missions.

Confidential and Proprietary Material of MSSS.

Motivating example: MMM on MSL

- Mastcam, MAHLI and MARDI (MMM) on MSL. MMM is an integrated four camera + buffer/compressor system, addressing a broad range of science goals. Custom developed. Mass: ~5 kg. Cost: ~$20M.

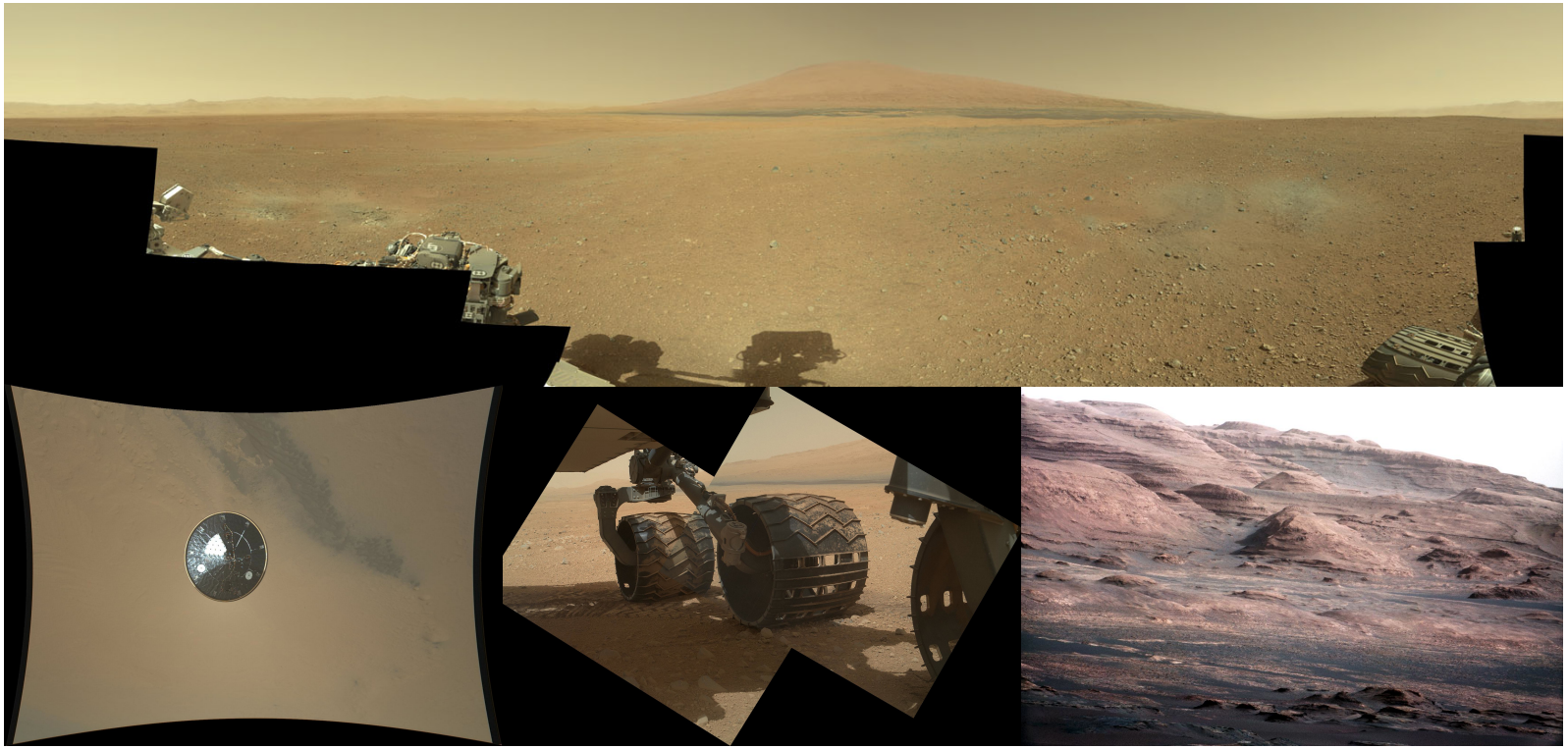

Confidential and Proprietary Material of MSSS.

ECAM design goals

- Similar capabilities to MSL MMM
  - Four cameras, independently positionable
  - Color (RGB using Bayer Pattern Filter)
  - Large flash buffer (8 to 32 Gbytes)
  - Video-like frame rates (multiple frames per second to tens of frames per second)
  - One interface to the spacecraft
  - High data rates, large data volumes and complicated image compression algorithms do not have to be handled by the spacecraft
  - Same reliability as our previous instruments (35 years of deep space operations)
- Reduction of resources
  - Mass: ~2X reduction
  - Cost: >10X reduction

Confidential and Proprietary Material of MSSS.

ECAM Architecture—Camera Heads

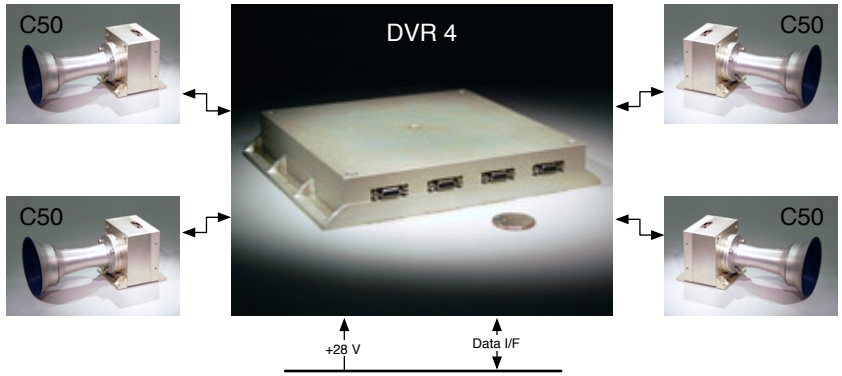

- ECAM camera types
  - 3 Mpixel CMOS sensor (color)
  - 5 Mpixel CMOS sensor (B/W or color)
  - 384 x 288 pixel microbolometer for thermal imaging
- Windowing (subframing), pixel binning and frame rate commandable
- Cable from DVR to camera may be up to 5 m long
- Three standard lenses available w/o NRE (~90°, ~50° and ~30° FOVs); custom optics available w/NRE

Confidential and Proprietary Material of MSSS.

ECAM Architecture--DVR

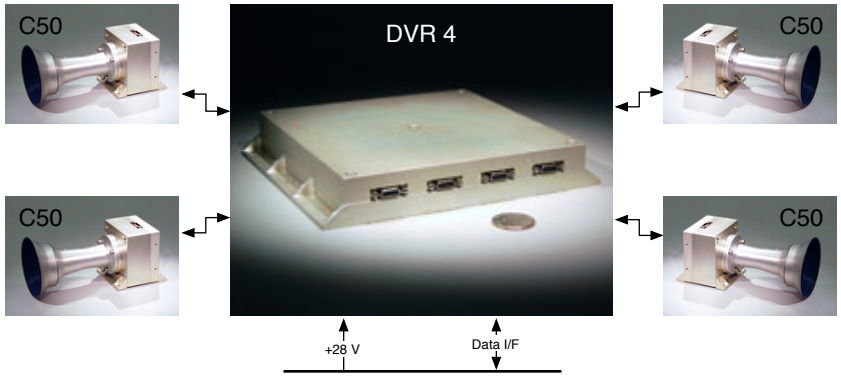

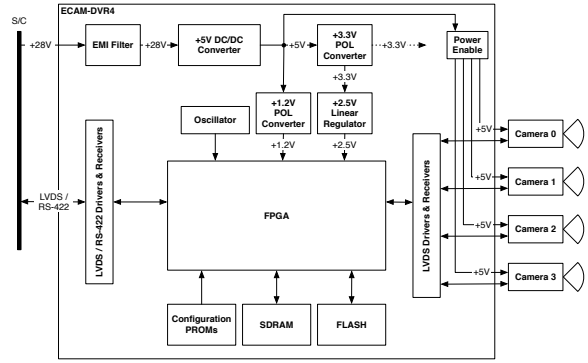

- DVR interfaces to cameras (power, data, commanding)
- DVR processes and stores data (Bayer pattern interpolation, compression, and buffering (8 to 32 Gbytes of flash)
- DVR provides one power (28 V) and one data interface to the spacecraft (baseline I/F is SpaceWire, but it can accommodate any customer specified four line LVDS or RS-422 interface)
- DVRs can be daisy-chained, making a DVR8 or DVR12, still with a single spacecraft command/data interface

Confidential and Proprietary Material of MSSS.

ECAM performance

- Frame rates depend on format
  - VGA: 40 FPS
  - HD720: 16 FPS
  - HD1080: 8 FPS
  - Full 5 Mpixel frame: 4 FPS
- Storage: 8 to 32 Gbytes will hold 1,000's to 10,000's of images, 10's of minutes of HD video
- Compression: JPEG, JPEG-LS, JPEG2000, H.264, custom
- Power: 9.75 W (idle), 13.5 W (imaging), 0.0 W (off)
- Mass
  - DVR4: 1.1 kg
  - Camera head w/standard lens: 0.35 kg each
  - System (w/o harness): 2.5 kg
- Cost: ~$1M with no customization

Confidential and Proprietary Material of MSSS.

ECAM Flight Heritage

- First generation of ECAM was developed for LRO, flown on a classified Earth orbiting program (CMA)
  - One box design, including cameras and optics, driven by LRO constraints
  - Operated in flight, images exceeded customer requirements (though they won't show them to us)
  - CMA incorporates all design elements of ECAM → current version of ECAM NASA TRL 7

CMA (1st gen. ECAM) flight instrument (above); 3 Mpixel color image of LRO solar array gimbal taken with ECAM (left—this is one frame of a 2 FPS video sequence)

Confidential and Proprietary Material of MSSS.

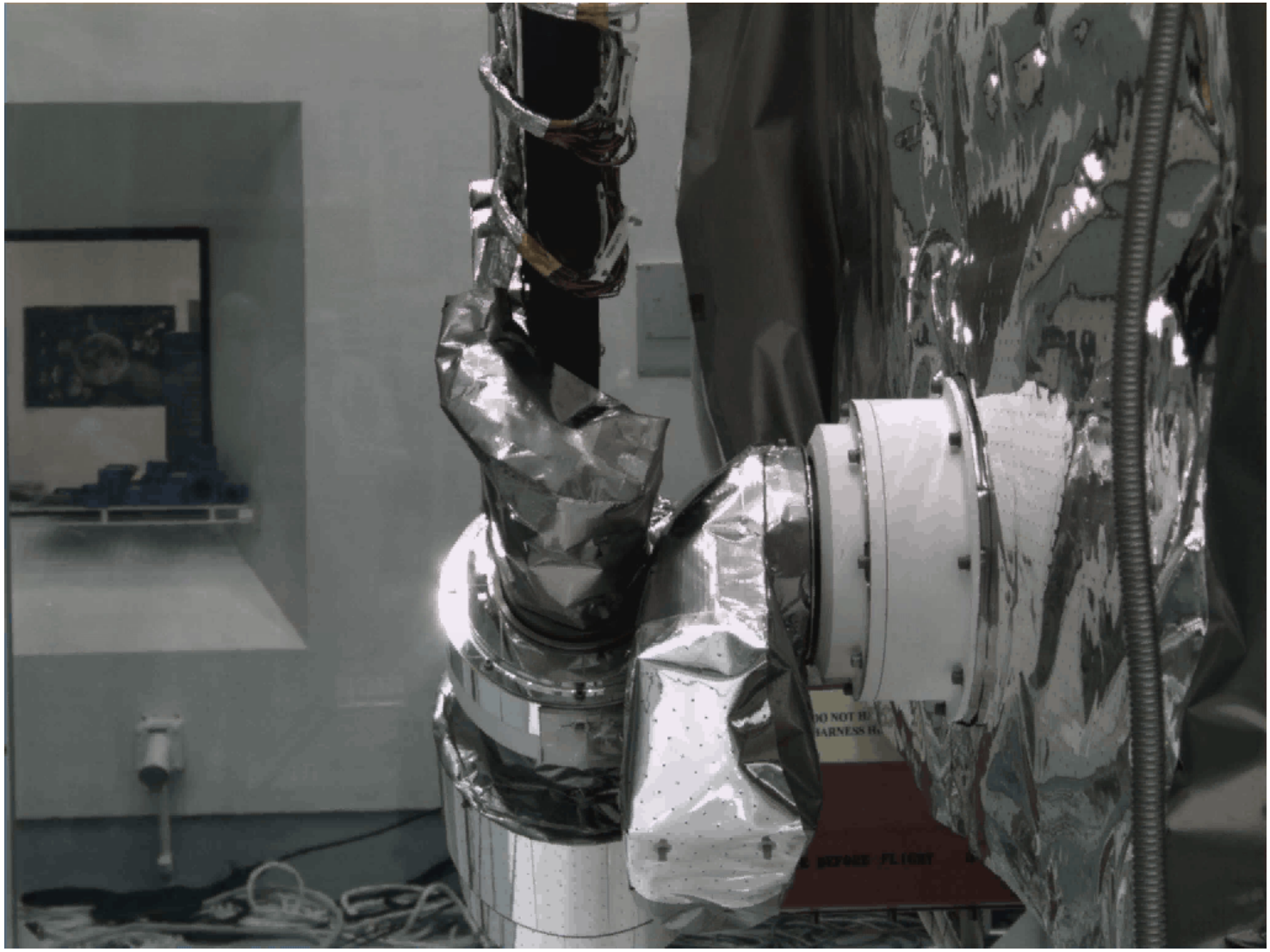

ECAM 3 Mpixel color movie of LRO solar array gimbal test (2 FPS sequence, sped up 8X)

Confidential and Proprietary Material of MSSS.

Science Applications for ECAM architecture

- For what applications would a 2.5 kg, $1M suite of cameras plus data processing system be useful?
  - Very mass constrained missions (landers, probes, small orbiters)
  - Applications which are secondary to the mission (and thus worth only a small fraction of the payload resources)
  - Competed missions, which are always cost constrained
  - Highly downlink constrained missions, for which a large data buffer and internal processing (thumbnails, color ratio, other image analysis) could substantially improve the science return
- We have proposed ECAMs for several Discovery Missions, in applications where RGB imaging of morphology was all that was required.
- For more challenging science applications, requiring larger pixels and lower noise for better SNR, broader spectral coverage, better spectral discriminability and more accurate radiometric performance, we are designing additional camera heads with performance better suited to science.

Confidential and Proprietary Material of MSSS.

Science Camera Heads

- Detectors: non-visible wavelengths require other sensors, better SNR requires different sensors, but ones that fit within the ECAM architecture (small, low power, do not require cryogenic cooling).
  - UV (200-400 nm): 1280 x 1024, 10.8 μm pixel back-illuminated CMOS detector (response actually goes out to 900 nm)
  - Visible-near IR (400-1000 nm): 2560 x 2160, 6.5 μm pixel scientific CMOS detector with 2 e- read noise
  - SWIR (900-1.7 μm): 1280 x 1024, 12.5 μm pixel InGaAs detector (customizable out to 2.5 μm, w/integral TEC for temperature stability)
  - LWIR (7-14 μm) : 1024 x 768, 17 μm pixel uncooled microbolometer detector (integral TEC for temperature stability)
- Optics: need to be customized for the particular application. Options range from wide field refractive to narrow field catadioptric to spectrographs. Multiple camera heads can provide stereo.

Confidential and Proprietary Material of MSSS.

Example: Mars Weather Camera

- Low polar orbit platform. Daily global weather map in the UV, vis and LWIR.
- Four camera heads, each covering a different wavelength range:
  - UV: two pushframe bands, 240-290 nm and 305-335 nm for mapping ozone
  - Visible: blue (400-450 nm) and red (575-625 nm) pushframe bands to distinguish dust and water ice clouds
  - Thermal IR: 7 μm and 9 μm bands for pushframe mapping of dust
  - EPO camera: an ECAM RGB camera head for public engagement stills and HD video
- DVR generates a low res global map for daily downlink, while retaining the original, much higher resolution data. A 32 GB buffer allows weeks of data to be kept for later downlink (eg, catch the start of a dust storm).

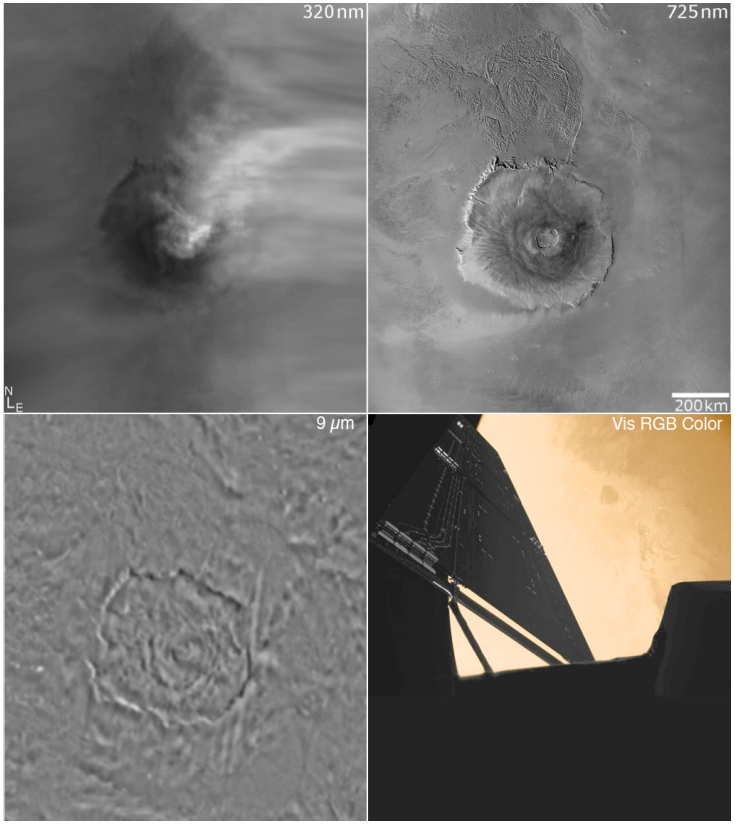

Confidential and Proprietary Material of MSSS.

Summary

- MSSS has developed a low-mass and cost spaceflight imaging system for engineering applications (ECAM)
- We are extending this modular architecture to incorporate science-grade cameras, covering wavelengths from the UV to the thermal IR
- By extending the ECAM architecture in this way, it is possible to produce capable instruments for low-mass and cost compared to custom developed instruments
- Such instruments could be enabling in cases where the constraints of mass and/or cost make more traditional approaches prohibitive (small missions, competed missions)

Confidential and Proprietary Material of MSSS.